PENTAIR FLOTEC

ECODRAIN

CAST IRON DUAL-CHANNEL DRAINAGE PUMPS

ECODRAIN is a versatile dewatering pump for the efficient disposal of unwanted water containing particles up to 20 mm diameter. Ideal for storm and drainage water evacuation, and the disposal of grey water and septic effluent.



KEY FEATURES

- Dual channel impeller design
- Free passage up to 20 mm
- Hard-wearing cast iron pump body
- Resilient double mechanical seal
- Integrated float switch for automatic operation



APPLICATIONS

- Disposal of wastewater, septic effluent water and grey water.
- Dewatering of surface, ground and stormwater.
- Water treatment circulation.

OPERATING CONDITIONS

Install pump vertically. Operate submerged in water containing no more than 2% fine solids concentration and soft solids no greater than 20 mm diameter.

Fluid:	Water
Max. water temperature:	40 °C
Min. water temperature:	4 °C
Max. submergence:	5m
Max. particle size:	20 mm
Max. fine solid concentration:	2%
Max. liquid density:	1200 kg/m³
Suitable pH range:	4 - 10

PUMP INFORMATION

Vertical, single-stage submersible pump with soft solids handling capabilities up to 20 mm. A double mechanical seal in an oil bath delivers superior solids handling and exceptional durability. Hosetail connection included.

Component	Material
Pump casing	Cast iron
Impeller	Cast iron
Motor shaft	Stainless steel 304
Motor housing	Stainless steel 304
Mehanical seal	SiC/Carbon + Carbon/Ceramic
Oil seal	NBR
Power cable	H07RN-F
Float cable	H07RN-F

ELECTRICAL DATA

Type	Type of current	Voltage ± 10%	Frequency Hz	Motor rating kW P2	RPM min	Locked rotor current ampere	Current ampere	Motor protection	IP rating	Insulation class	Cable length
ECD180	1-phase	220 - 240	50	.18	2850	7.5	2	Yes	X8	F	10 m
ECD370				.37		6.9	3.5				
ECD550				.55		12.4	4.5				

DIMENSIONS

Type	Dimensions (mm)							Net weight (kg)	Packed weight (kg)
	L	W	H	D	Hosetail barb nominal	Pump ON float height	Pump OFF float height		
ECD180	221	158	362	1½" BSP FI	40	390	200	10	10.9
ECD370	221	158	372	1½" BSP FI	40	390	200	10.7	11.6
ECD550	260	185	410	2" BSP FI	50	400	270	13.9	15

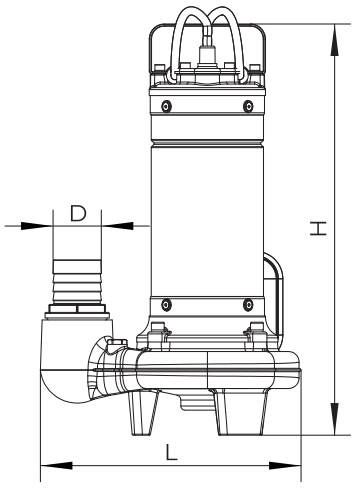

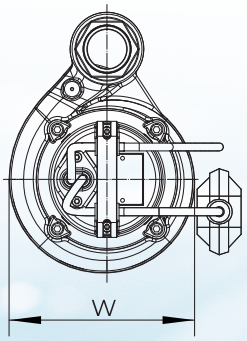

PERFORMANCE

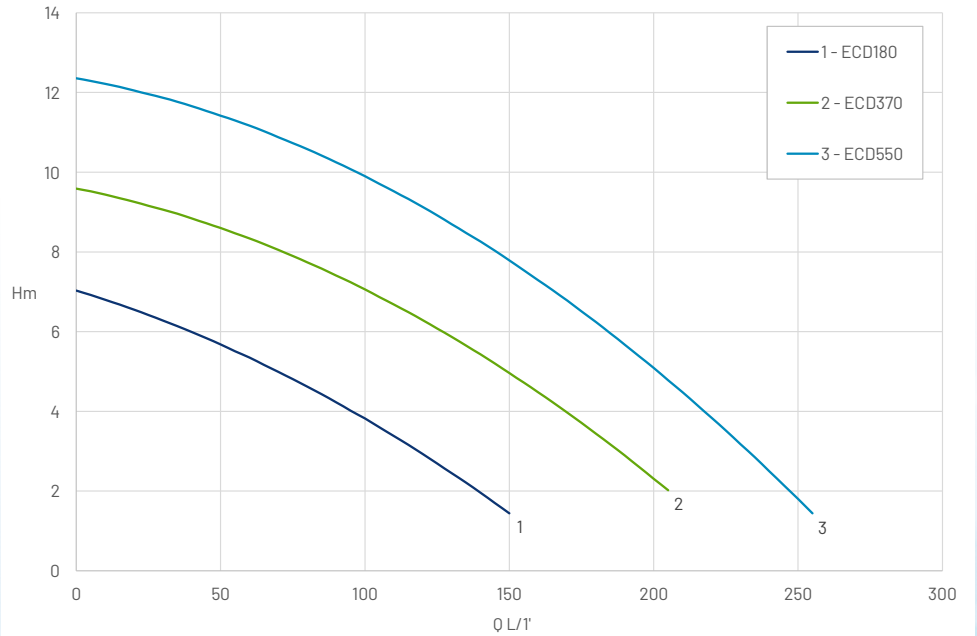

PENTAIR

1-21 Monash Drive | Dandenong South, VIC 3175 | Australia | 1300 137 344 | pentair.com.au

Information contained here-in remains the property of Pentair Australia Pty Ltd under Australian copyright law.
Content may not be reproduced or transmitted without our prior written permission.

©2026 Pentair. All rights reserved. This document is subject to change without notice.